404J-E22TA

Industrial Open Power Unit (IOPU)

EU Stage V/U.S. EPA Tier 4 Final/ Japan 2014 (Tier 4 Final)

55 kW (74 hp) @ 2800 rpm

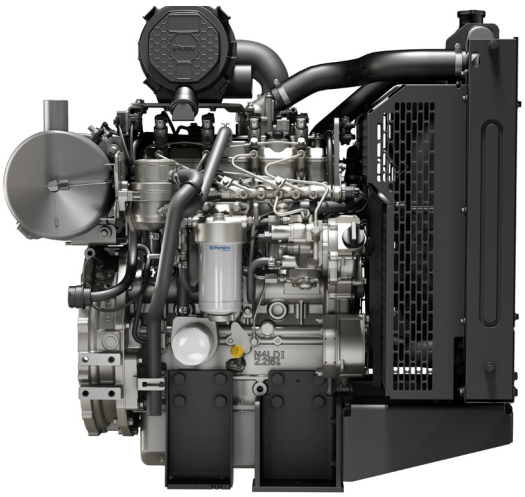

The Perkins® 404J-E22TA IOPU provides a complete plug-and-play power solution to meet EU Stage V, U.S. EPA Tier 4 Final and Japan 2014 (Tier 4 Final) emission standards. With a wide choice of options, engine configurations and robust technologies, you can integrate the 404J-E22TA IOPU into equipment with minimal re-engineering that can help save valuable costs.

Features and benefits

Low cost installation

Perkins IOPU is available with aftertreatment and air filter ready mounted from factory. Additionally, multiple installation options provide an easy installation for OEMs and minimise the IOPU total size to enable a low cost installation into your machine.

Powerful performance

Broad range of options for agricultural, materials handling, construction, mining, aircraft ground support, and other industrial applications. Improved power by 10 percent and torque by 30 percent over the previous generation Perkins engine. Fuel efficiency optimised to match operating cycles of a wide range of non-road equipment encourages standardisation across numerous applications or OEM variants to help reduce your variety.

Straightforward maintenance

Oil service is only needed every 500 hours. Service points are located on the cold side of the engine for a safer service. Factory fitted diesel particulate filter is made for the life of your engine and no workcycle interruption for regeneration.

Specification	
Cylinders	4
Displacement, litres (in^3)	2.2 (135)
Aspiration	Turbocharged aftercooled
Bore and stroke, mm (in)	84 × 100 (3.3 × 3.9)
Maximum power, kW (hp)	55 (74)
Rated speed, rpm	2800
Maximum torque, Nm (lb ft) @ rpm	270 (199) @ 1600
Combustion system	Direct injection
Weight, kg (lb)	327 (721) dry / 344 (758) wet
Rotation (viewed from flywheel)	Anti-clockwise

For more information please contact a Perkins distributor: http://distributorlocator.perkins.com

All information in this document is substantially correct at time of printing and may be altered subsequently.
Photographs are for illustrative purposes only and may not reflect final specification.
Final weight and dimensions will depend on completed specification.
Information subject to selected configuration, and subject to change without notice.
Engine power measured per ISO 14396:2002.
100142-EN-01 (11/23) Produced in England ©2023 Perkins Engines Company Limited.

Perkins®

404J-E22TA

Industrial Open Power Unit (IOPU)

EU Stage V/U.S. EPA Tier 4 Final/ Japan 2014 (Tier 4 Final)

55 kW (74 hp) @ 2800 rpm

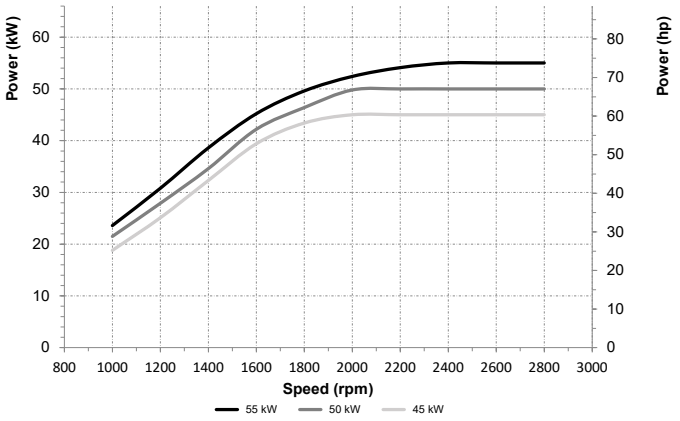

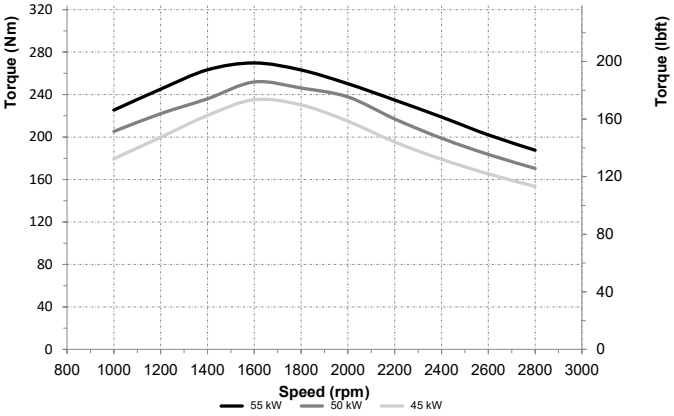

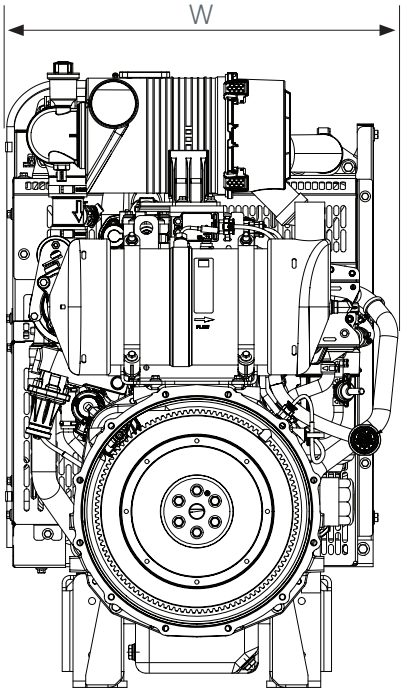

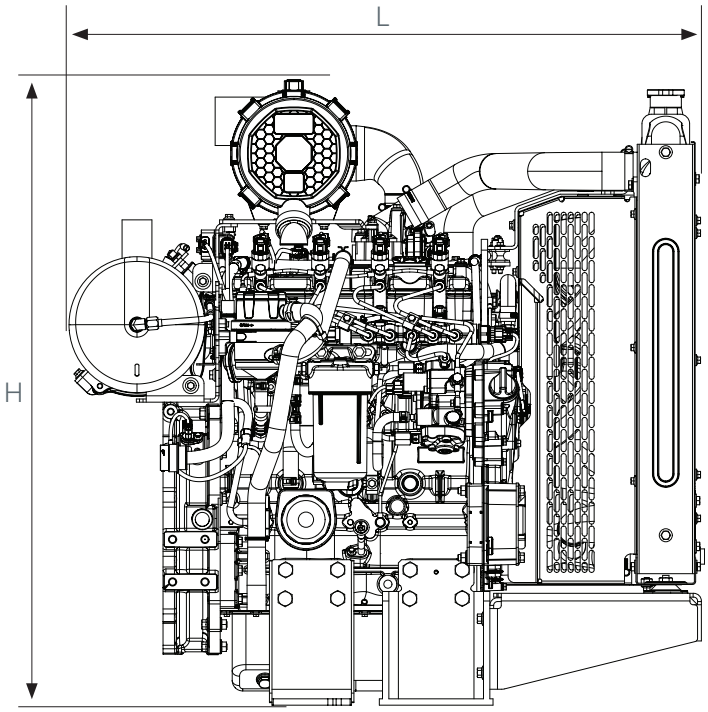

Dimensions and weight	
Length (including fan), mm (in)	992 (39.1)
Width, mm (in)	602 (23.7)
Height, mm (in)	985 (38.8)
Weight, kg (lb)	327 (721) dry / 344 (758) wet

For more information please contact a Perkins distributor: http://distributorlocator.perkins.com

All information in this document is substantially correct at time of printing and may be altered subsequently.
Photographs are for illustrative purposes only and may not reflect final specification.
Final weight and dimensions will depend on completed specification.
Information subject to selected configuration, and subject to change without notice.
Engine power measured per ISO 14396:2002.
100142-EN-01 (11/23) Produced in England ©2023 Perkins Engines Company Limited.

Perkins®